Power
Power

MCU
MCU

Title		
Size A	Number	Revision
Date: 3/01/2026		Sheet of
File: TopLevel.SchDoc		Drawn By:

Power Supply

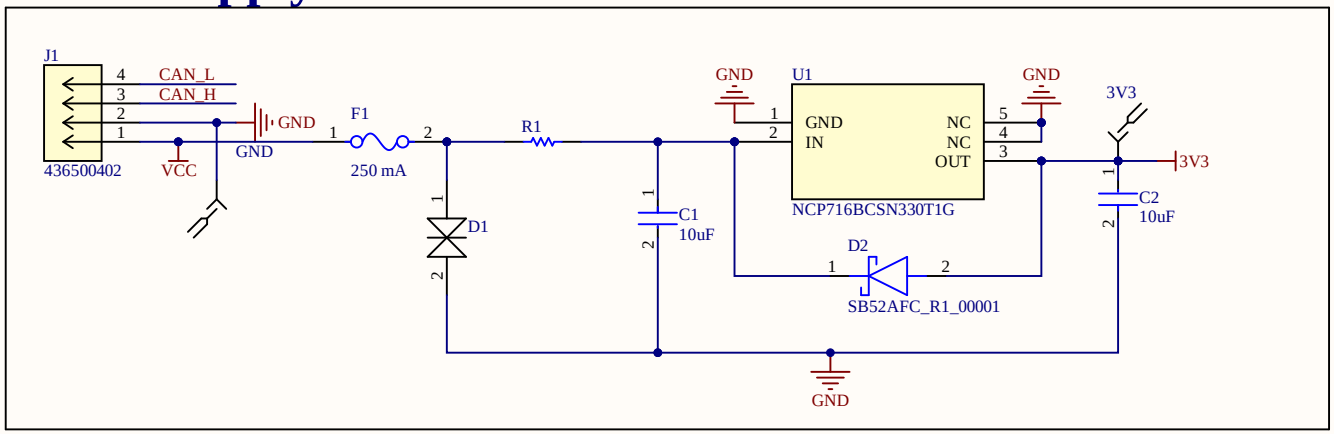

Title		
Size A	Number	Revision
Date: 3/01/2026		Sheet of
File: Power.SchDoc		Drawn By:

STM32H753VIT6

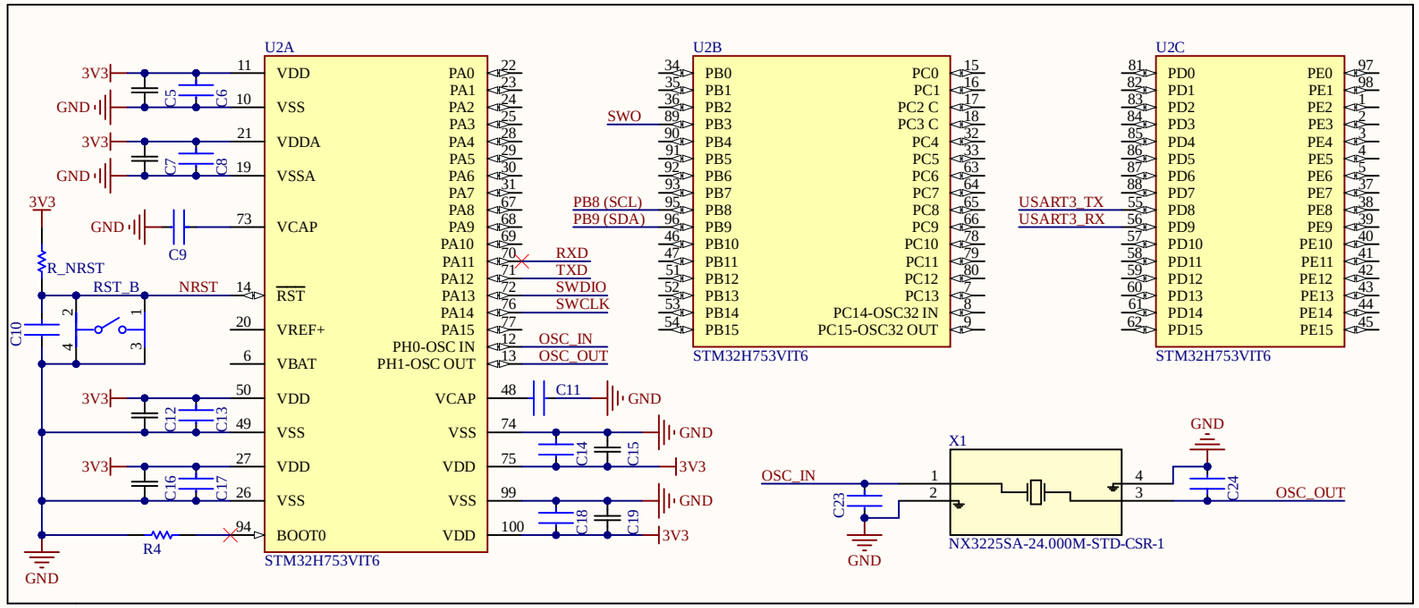

Debug Header

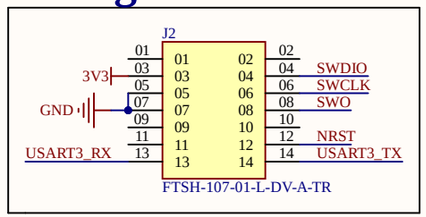

Status

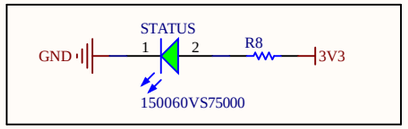

Test Points

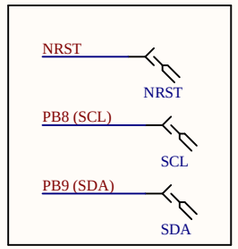

Thermal Sensor

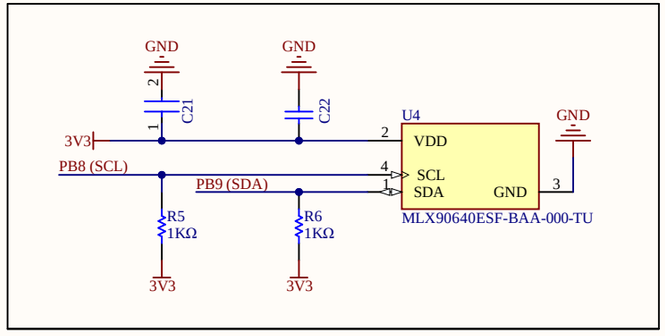

CAN Transciever

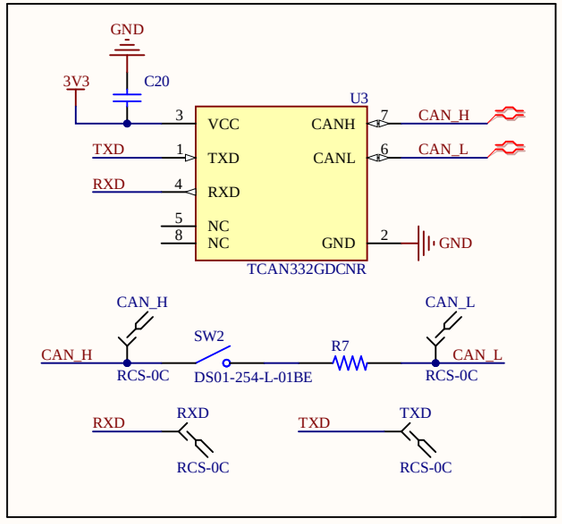

Title		
Size B	Number	Revision
Date: 3/01/2026	Sheet of	
File: MCU.SchDoc	Drawn By:	